SUDEXPRESS®
scale model trains

AVALIARE Engenharia Lda.
Centro Comercial da Estação
Praça Camilo Castelo Branco, 31
2º Andar - Sala 48
4700-209 Braga
Portugal

www.sudexpressmodels.eu

Pantograph Motorization

All Euro6000 models are ready to be retrofitted with our pantograph motorization kit Ref. SUD3159 (sold separately).

This kit contains two special pantographs, two servomotors and respective mounting screws and can be purchased directly from Sudexpress or via your reseller.

This kit will only function with a compatible digital decoder.

To install a pantograph please follow first the instructions in **fig. 1** to open the model. Then unscrew the stock pantograph and remove the cover part to expose the roof slot "N" (**fig. 5**). Assemble the new pantograph "Q" and the re-screw "R". Put the servomotor “S” in place and screw the two supplied screws “T” in the kit. Make sure that the pantograph arm and the servo leading slide are mounted as shown in "U". Finally, connect the wire harness to the connectors on the main PCB board.

The installation instructions described above apply to both pantographs.

5.

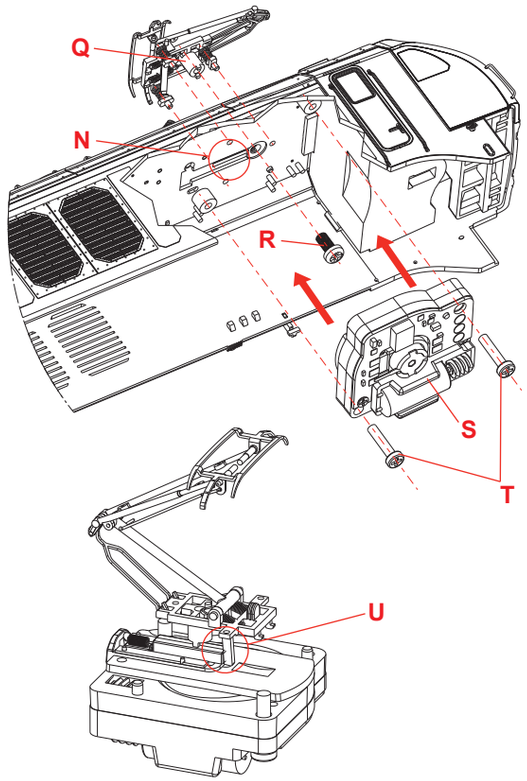

Accessory and Detail parts

Some extra detail parts (”V”) like brake hoses, coupler and closed front track clearer/snow plow (”X”) are included in a small bag. They can be assembled like shown in **fig. 6**. Please bear in mind that these details may hinder the proper functioning of the NEM coupler box “W”. For the use of closed track clearer/snow plow the complete removal of the NEM coupler box is required.

6.

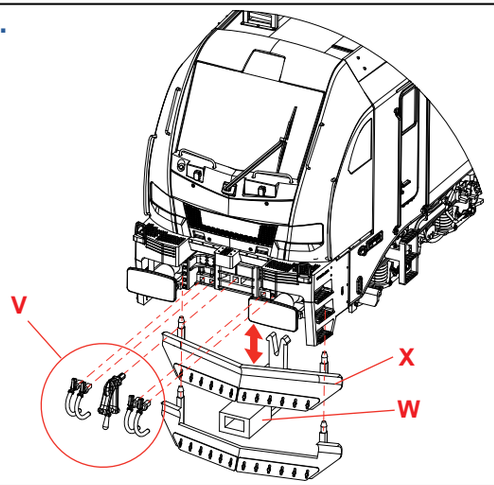

DCC functions

For a complete list of digital functions from the ESU LokPilot or LokSound Project please consult the provided official ESU bulletin or download it from the Sudexpress webpage under Products > [your product] > Decoder Files.

Please check the Sudexpress webpage (https://sudexpressmodels.eu/) or the ESU webpage (https://www.esu.eu/) for any sound project update. Newer versions with improvements or added functions may be released in the future.

We recomend the use of ESU decoders on our Euro6000 locomotives.

ESU

EURO6000

STADLER

Official Licensed Product

User Manual

H0 1:87

Historical Background

EURO6000 is an electric multi-system Co'Co' locomotive that belongs to the EURODUAL family, witch basically is the full electric version (without diesel prime mover) of the later. Built by Stadler Rail Valencia (Spain), these locomotives are able to run on standard gauge and/or Iberian gauge lines under three different overhead voltages, 1.5KV DC, 3KV DC and 25KV AC, at speeds up to 160km/h.

The EURO6000 is available in two configurations. One for operating on the Iberian gauge (1668 mm) tracks in Spain and/or Portugal and the other, available in standard gauge (1435 mm) to operate in France, Belgium, Luxembourg and on the standard gauge lines in Spain as well as cross-border traffic between the above mentioned countries. In addition, they can be fitted with "universal" bogies to be used on tracks of different gauges by easily changing the wheelsets in a workshop. Featuring cutting-edge technology that exceeds TSI requirements, these locomotives offers high hauling capacity; low energy consumption and reduced operative costs. The tri-voltage electric locomotives promote a carbon-free rail freight transport. All these specs and features combined, make the EURO6000 one of the best electric locomotives available in Europe, and the most powerful one in the Iberian Peninsula.

The first order for EURO6000 locomotives was received from Alpha Trains in 2019, with further orders placed by Captrain España, Captrain France, Continental Rail, Medway Iberia and Renfe Mercancías. Currently the delivery of the above mentioned orders is ongoing with more clients and orders planned.

Length over buffers:	23020 mm
Height:	4290 mm
Width:	2900 mm
Axle Configuration:	Co'Co'
Gauge:	1435 mm/1668 mm
Wheel diameter:	1100/1020 mm
Loco weight:	120 t
Wheelset load:	20, designed for 21,5 tons
Power:	6000 kW (25 kV, 50 Hz ~) 5600 kW (3 kV =) 4000 kW (1,5 kV =)
Starting tractive effort:	500 kN
Continnuouse tractive effort:	430 kN
Minimum curve radius:	90 m
Max Speed:	120 – 160 km/h
Saftey Systems:	ASFA, KVB, ETCS
Electric system:	25 kV, 50 Hz ~ 1,5 kV = 3 kV =
Current countries with homologation:	ES/F/B/L

Initial Handling

Read the instructions carefully before using the model.

Carefully remove the locomotive from the plastic blister and wrapping. Keep the box and instruction sheets for future reference.

Use a transformer as power supply (not included) which corresponds to the EN 61558-2-7 standard.

Let the model run for approximately 30 min, both ways, at half speed, to make the motor and gears run smoother.

Please make sure, that your tracks are correctly mounted and well cleaned. Otherwise the model may not run properly.

The smallest curve radius the model can run on is 358 mm.

Disassembly

Gently release the body shell tabs "A" from the metal chassis like shown in **fig. 1**. Remove the body in an upward movement like shown in "B".

In order to replace wheel-set (**fig. 2)**, for **AC models**, release the 6 tabs of the bogie cover, marked with "C". For **DC models** please unscrew the 3 screws marked with "D". When reassembling the wheel-sets please be sure not to damage the pickup contacts "E".

All models have a factory installed speaker. How to access the speaker "F" is shown in **fig. 3**. Please unscrew both "G" marked screws to release the main PCB board "H" and to gain access to the speaker itself behind. Remove the two small screws that assemble the speaker box to the metal chassis.

Converting to Digital

Have you bought a DCC model with sound or an AC model? Then the loco comes already with a decoder installed (ESU LokPilot in case of AC Models). Our factory installed decoder is already setup and fully functioning, so no extra work or steps are required.

To convert an analogic version into digital please keep in mind that a special programming is required on the decoder to enable all the functions for this model. Therefore we recommend the compatible ESU LokSound 5 (97459) or LokPilot 5 (97659) decoders. For the use of ZIMO decoders, a special new adapter board ADAPLUMTC was created. For more informations please check out ZIMO's homepage at (http://www.zimo.at/).

Decoder Installation

Remove the body first (**fig. 1**), then remove the installed dummy decoder and replace it with a compatible 21 pin MTC decoder like shown in "I" (**fig. 3**).

Maintenance

It is recommended to service the loco on a regular basis after every 40 hours of usage. When servicing, carefully clean the rails and wheels with adequate cleaning products.

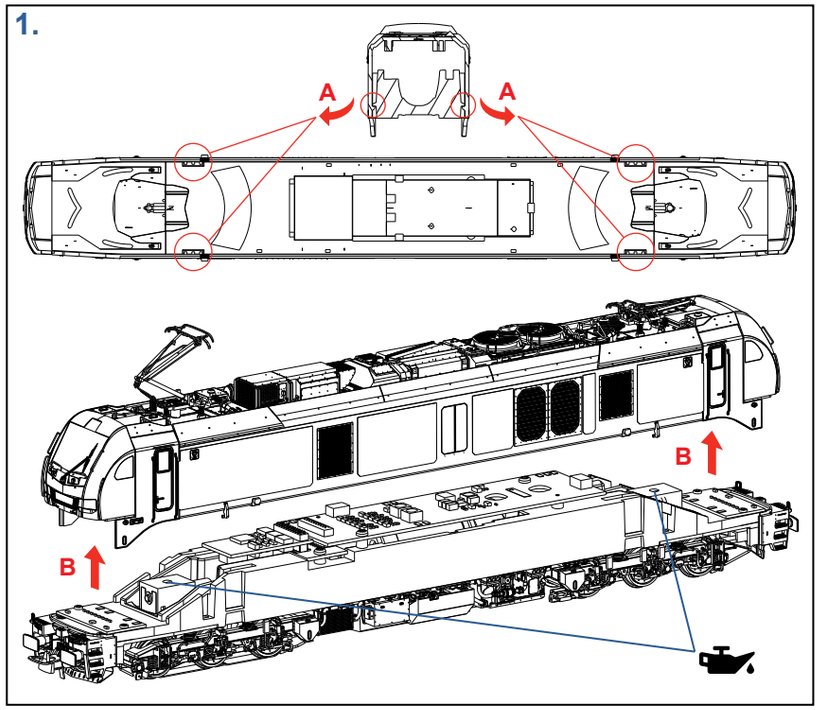

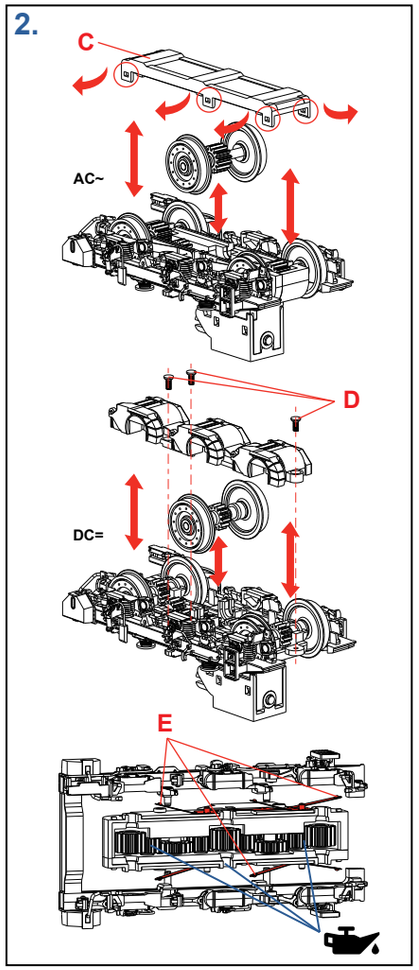

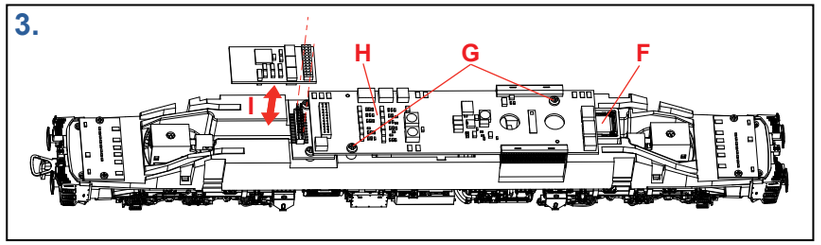

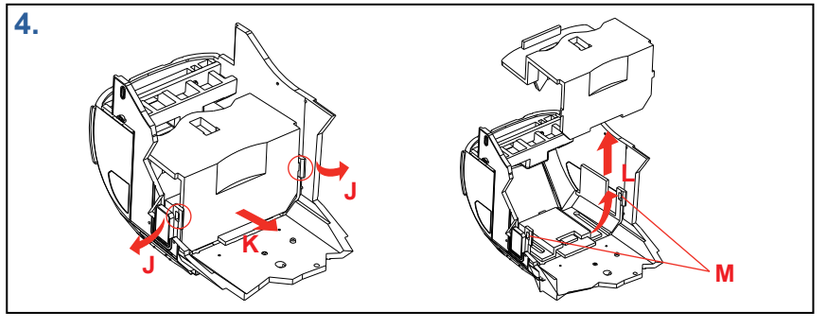

Also clean the inside contour of the wheels and use a small brush to remove dirt from the pickup contacts "E" if necessary (**fig. 2**). Lubricate the axle bearings using oil and apply grease to the gears (**fig. 1** and **fig. 2**).
All the required products for maintenance can be found at any model shop.

Cabin Disassembly

Carefully release the tabs "J" from the glass part and then pull out the cab as first shown in "K" and then up like in "L" (**fig. 4**). Please use extreme caution to avoid breaking the small assembly lugs "M" of the cabin glass part.